Dual Display Digital Pressure Sensor For Gas

DP-100 SERIES

Related Information
- General terms and conditions..... F-17
- SC-SU1..... P.917
- General precautions P.1405
- Sensor selection guide ..... P.661~
- Glossary of terms..... P.1373
- Korea's S-mark..... P.1410

panasonic-electric-works.net/sunx

Conforming to EMC Directive

cULus Recognition

Certified [DP-101(A)/102(A) only]

* Passed the UL 991 Environment Test

* UL 61010C-1 compatible, Passed the UL 991 Environment Test based on SEMI S2-0200. [Category applicable for semiconductor manufacturing: TWW2, Process Equipment] [Applicable standards: UL 61010C-1] [Additional test / evaluation standards as per intended use: UL 991, SEMI S2-0200]

LCD Digital | AUTO Auto reference | With analog output

Dual 3-color display makes operation easier!

The dual display means that the "current value" and the "threshold value", it makes direct setting of threshold value

Equipped with a 30 mm 1.181 in square compact-sized dual display. Because the current value and the threshold value can be checked at the same time, the threshold value can be set and checked smoothly without having to switch screen modes. ON / OFF operations are still carried out while the threshold values are being set, so setting to the same sensitivity as dial control-type sensors is possible. And naturally a key lock function is also equipped.

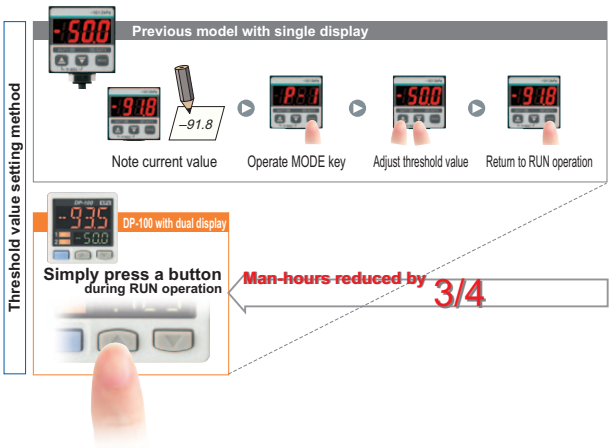

3-color display (Red, Green, Orange)

The main display changes color in line with changes in the status of output ON / OFF operation, and it also changes color while setting is in progress. The sensor status can therefore be understood easily, and operating errors can be reduced.

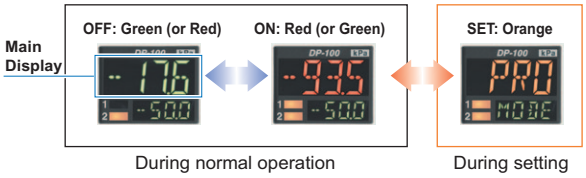

Readable digital display

12 segments are used and an alphanumeric display has been adopted. This improves visual checking of letters and numbers.

APPLICATIONS

Confirming suction of electronic component

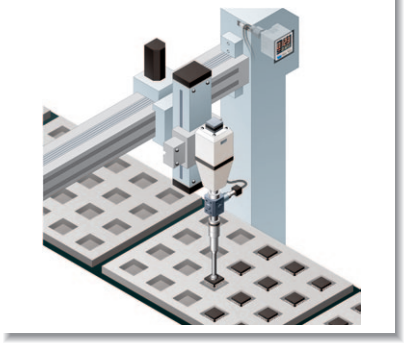

Confirming reference pressure

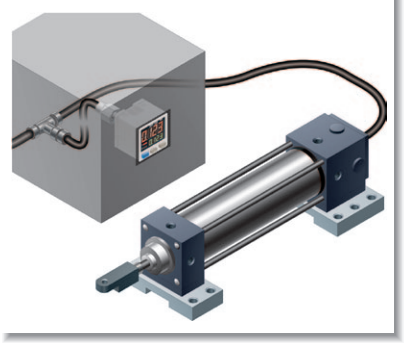

Air-leak test for PET bottles

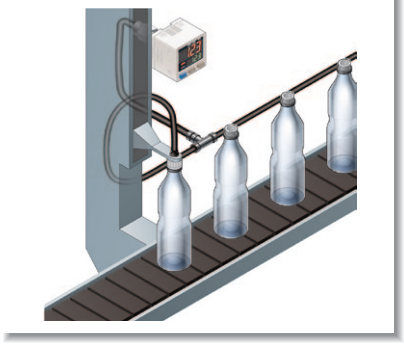

BASIC PERFORMANCE

All models in the line-up are compound pressure types

No sensor settings are required to switch between positive pressure and negative pressure, so that the number of registered part numbers can be decreased.

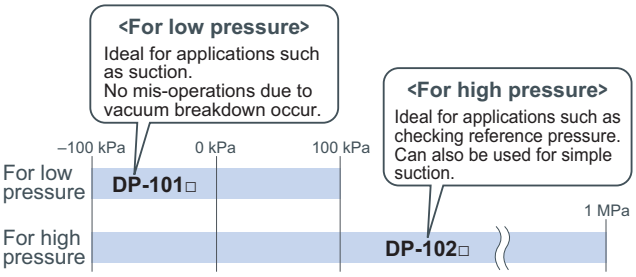

High performance accomplished Low pressure type

The low pressure type displays measurements in 0.1 kPa at a resolution of 1/2,000 and has a response time of 2.5 ms (variable up to 5,000 ms), ±0.5 % F.S. temperature characteristics and ±0.1 % F.S. repeatability, giving it high performance.

Resolution: 1/2,000
Response time: 2.5 ms
Temperature characteristics: ±0.5 % F.S.
Repeatability: ±0.1 % F.S.

Displays measurements in 0.1 kPa

FUNCTIONS

Copy function reduces man-hours and human error

Sensors can be connected to a master sensor one by one, and a copy of the setting details for the master sensor can be transmitted as data to the other sensors. If making the same settings for multiple sensors, this prevents setting errors from occurring with the other sensors and also reduces the number of changes required to instruction manuals when equipment designs are changed.

Copying via wiring

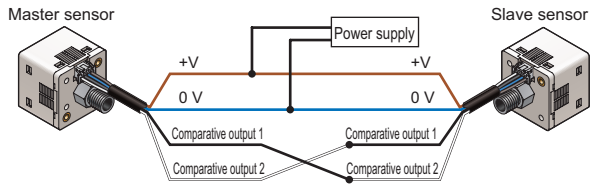

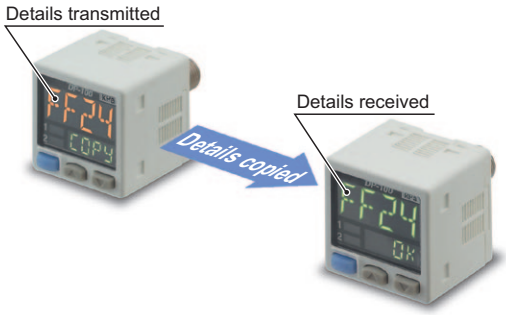

The sensor's setting operation mode has a 3-level configuration to suit the frequency of use

The setting levels are clearly separated into "RUN mode" for operation settings that are carried out daily, "MENU SETTING mode" for basic settings, and "PRO mode" for special and detailed setting. These make setting operations easy to understand and easy to carry out.

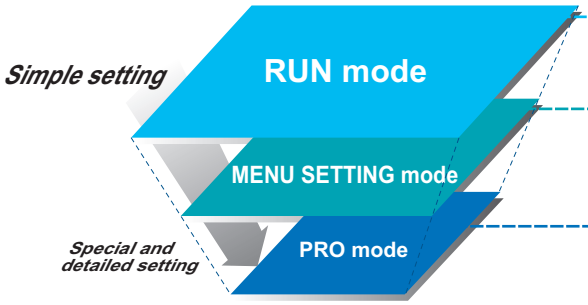

RUN mode

Settings such as threshold value adjustment and key lock operation can be carried out while the sensor is operating.

MENU SETTING mode

Basic settings such as output mode setting and NO / NC switching can be carried out.

PRO mode

High-level function settings such as hysteresis adjustment and the copy function can be carried out.

FIBER SENSORS
LASER SENSORS
PHOTOELECTRIC SENSORS
MICRO PHOTOELECTRIC SENSORS
AREA SENSORS
LIGHT CURTAINS
PRESSURE / FLOW SENSORS
INDUCTIVE PROXIMITY SENSORS
PARTICULAR USE SENSORS
SENSOR OPTIONS
SIMPLE WIRE-SAVING UNITS
WIRE-SAVING SYSTEMS
MEASUREMENT SENSORS
STATIC CONTROL DEVICES
ENDOSCOPE
LASER MARKERS
PLC / TERMINALS
HUMAN MACHINE INTERFACES
ENERGY CONSUMPTION VISUALIZATION COMPONENTS
FA COMPONENTS
MACHINE VISION SYSTEMS
UV CURING SYSTEMS
Selection Guide
Pressure/ Digital Display
Pressure/ Head-separated
Flow
Other Products
DP-100
DP-M

FUNCTIONS

Equipped with independent dual output and three output modes

Standard type

Equipped with two independent comparative outputs, and separate sensing modes can be selected for each of them. Since there are two comparative outputs, one of the comparative outputs can even be used for alarm output. In addition, if an output is not being used, it can be disabled.

Vacuum breakdown can also be checked during suction applications!

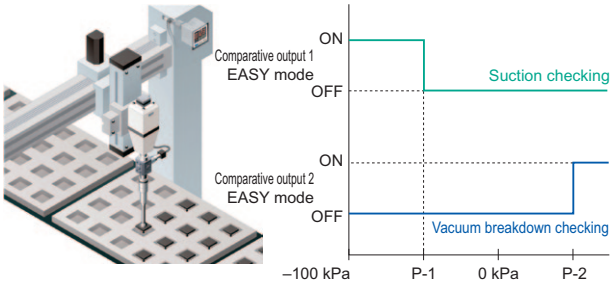

Reference pressure alarm output is possible during reference pressure checking!

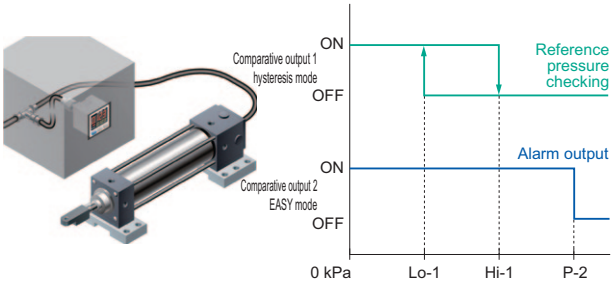

① EASY mode

This mode is used for comparative output ON / OFF control.

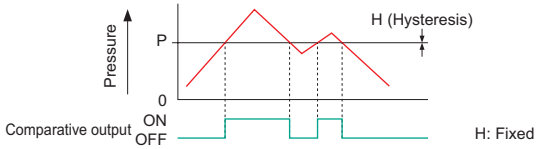

Notes: 1) Hysteresis can be fixed to one of eight different levels.
2) " P-1 "appears in the sub display for comparative output 1, and " P-2 " appears for comparative output 2.

② Hysteresis mode

This mode is used for setting comparative output hysteresis to the desired level and for carrying out ON / OFF control.

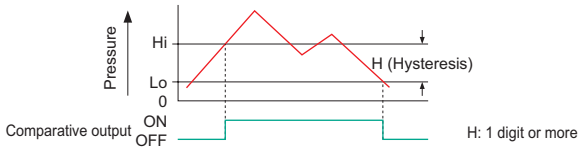

Note: " Hi-1 " or " Lo-1 " appears in the sub display for comparative output 1, and " Hi-2 " or " Lo-2 " appears for comparative output 2.

③ Window comparator mode

This mode is used for setting comparative output ON and OFF at pressures within the setting range.

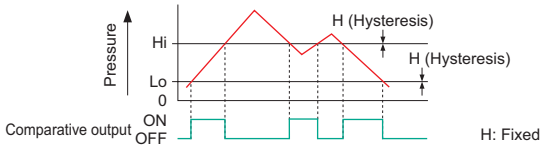

Notes: 1) Hysteresis can be fixed to one of eight different levels.
2) " Hi-1 " or " Lo-1 " appears in the sub display for comparative output 1, and " Hi-2 " or " Lo-2 " appears for comparative output 2.

Equipped with auto-reference / remote zero-adjustment functions, more precise pressure management is possible with a minimum of effort

Multi-function type

If the reference pressure of the device changes, the auto-reference function partially shift the comparative output judgment level by the amount that the reference pressure shifts, and the remote zero-adjustment function can reset the display value to zero via external input. These functions are ideal for places where the reference pressure fluctuates wildly, or where fine settings are desired.

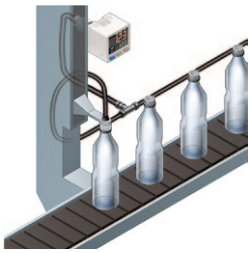

With auto-reference function applied

Comparative output: Window comparator mode
Hi-1…0, Lo-1…–5
Sets the absolute threshold level

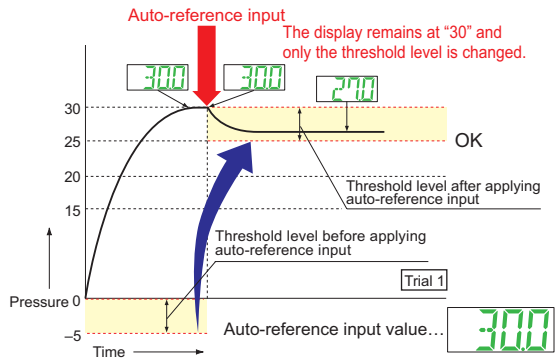

When auto-reference input is applied, the reference pressure "30" is added to the threshold level. If the reference pressure changes to "20" or "40", the auto-reference input compensates for this every time by changing the threshold level, so any variation in the filling pressure can be ignored.

With remote zero-adjustment function applied

Comparative output: Window comparator mode
Hi-1…0, Lo-1…–5
Sets the absolute threshold level

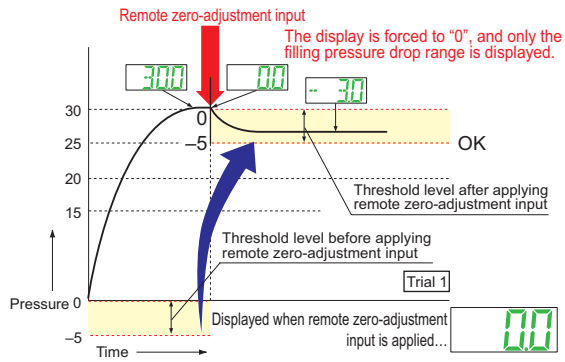

When remote zero-adjustment input is applied, the reference pressure is forced to "0". If the reference pressure changes to "20" or "40", the remote zero-adjustment input adjusts the reference pressure to "0" every time the reference pressure changes, so any variation in the filling pressure can be ignored.

FUNCTIONS

Sub display can be customized

The sub display can be set to indicate any other desired values or letters apart from the threshold value. This eliminates the need for tasks such as affixing a label to the device to indicate the normal pressure value.

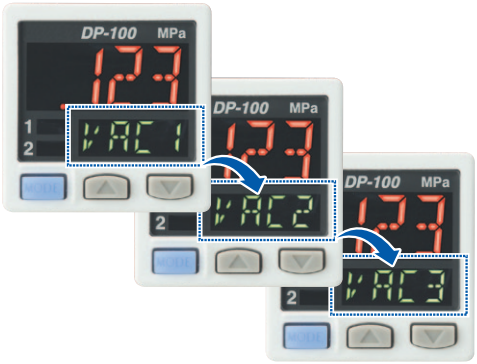

Setting details can be understood at a glance

The **DP-100** setting details appear in the digital display. Because the settings are in numeric form that can be easily understood, it is useful for times such as when receiving technical support by telephone.

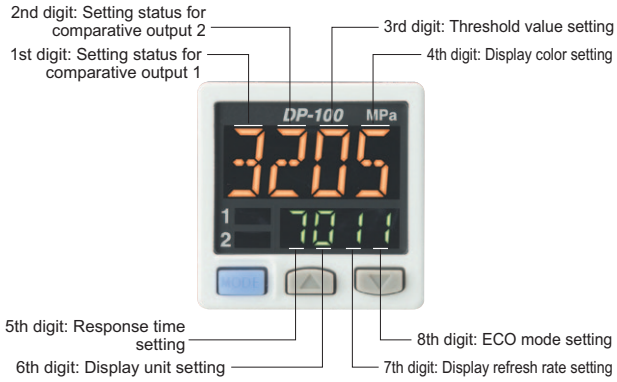

MOUNTING

Tight installation to panels is possible

An exclusive mounting bracket that is suitable for 1 to 6 mm 0.039 to 0.236 in panel thickness is available.

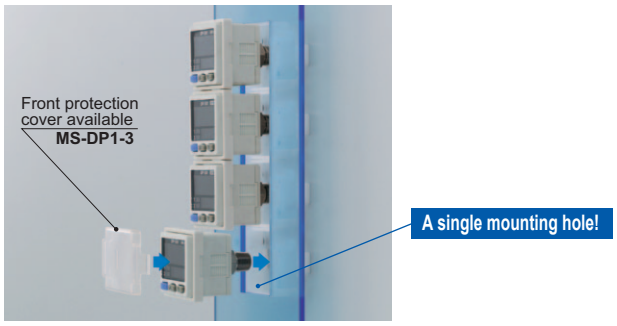

An exclusive mounting bracket (MS-DP1-1) that supports tight installation is available

Space savings can also be obtained if an L-shaped mounting bracket is used.

• **MS-DP1-1**

Ceiling mounting | Floor mounting

• **MS-DP1-5**

Rear mounting

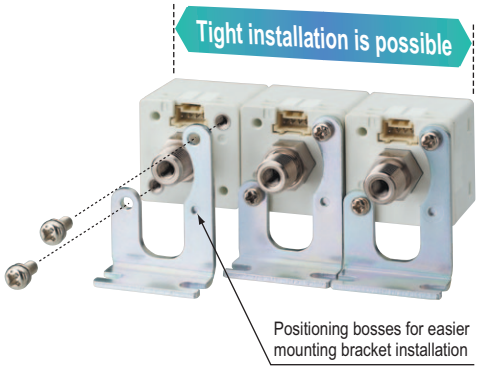

Cable can be connected with one-touch connection

The accessory connector attached cable (2 m 6.562 ft) can be connected easily with one-touch connection.

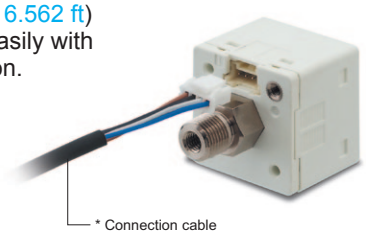

Types without connector attached cable are also available

DP-10□-J

Commercially-available connectors can be used for cable connections. Only the required length of cable needs to be used, which contributes to a reduced amount of wastage for unneeded cable.

* Options: 1 m 3.281 ft / 3 m 9.843 ft / 5 m 16.404 ft types are also available.

VARIETIES

Short pressure port type is lightweight and takes up little space

DP-10□-M

Compact size with a depth of only 30 mm 1.181 in, so that it can easily fit into narrow spaces.
Further, 10 g lighter than standard types. This reduces the loads on movable parts such as robot arms.

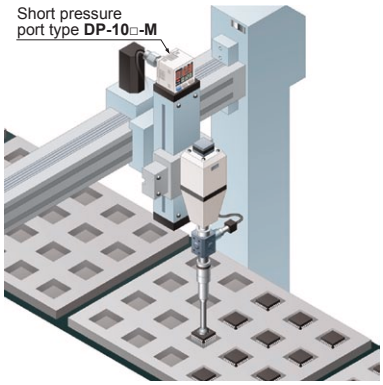

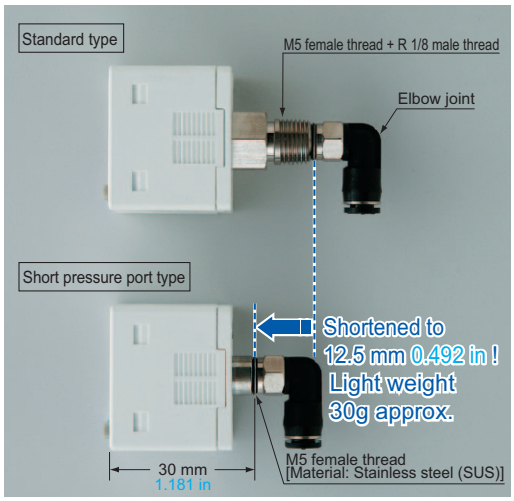

* The illustration shows connection using an elbow joint.
The elbow joint is sold separately.

M8 piug-in connector types are also available (for Europe)

DP-11□-E-P-J

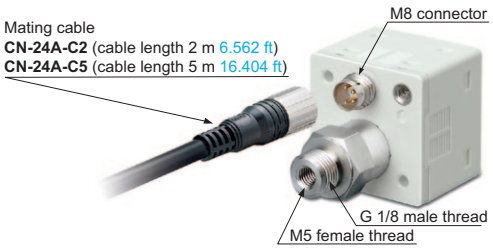

Switch-over of the pressure port or flat mounting on the wall is possible

For short pressure port type

By mounting the flat attachment to **DP-10□-M(-P)**, pressure port and cable can now be pulled out in downward, left or right directions. Flat mounting on surfaces such as the wall is made possible.

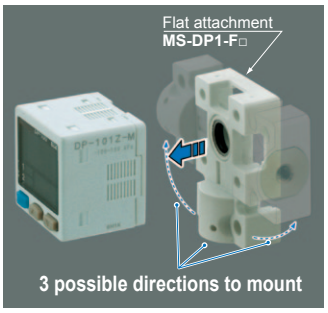

Previous model **DP2** / **DP3** series can be switched over to **DP-100** series.

Model No.	Pressure port
MS-DP1-FM	M5 female thread
MS-DP1-FR	Rc1/8 female thread
MS-DP1-FN	NPT1/8 female thread
MS-DP1-FE	G1/8 female thread

Rc1/8 conversion bushing improves compatibility with the previous model

For short pressure port type

By equipping the push-in converter with **DP-10□-M(-P)**, pressure port can be converted from M5 female thread to Rc1/8 female thread.
Bore diameter conversion to the **DP2** / **DP3** series is possible.

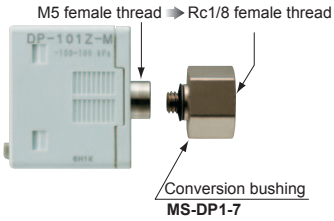

ORDER GUIDE

Type				Appearance	Rated pressure range	Model No.	Pressure port	Comparative output
Standard pressure port type	Asia	Standard	For low pressure	 *CN-14A-C2 (Connector attached cable 2 m 6.562 ft) is attached. (Excluding M8 plug-in connector type)	–100.0 to +100.0 kPa	**DP-101**	M5 female thread + R 1/8 male thread	NPN open-collector transistor
			For high pressure		–0.100 to +1.000 MPa	**DP-102**		
		Multi-function	For low pressure		–100.0 to +100.0 kPa	**DP-101A**		
			For high pressure		–0.100 to +1.000 MPa	**DP-102A**		
	Europe	Standard	For low pressure		–100.0 to +100.0 kPa	**DP-101-E-P**	M5 female thread + G 1/8 male thread	PNP open-collector transistor
			For high pressure		–0.100 to +1.000 MPa	**DP-102-E-P**		
		Multi-function	For low pressure		–100.0 to +100.0 kPa	**DP-101A-E-P**		
			For high pressure		–0.100 to +1.000 MPa	**DP-102A-E-P**		
	Europe (M8 plug-in connector type)	Standard	For low pressure		–100.0 to +100.0 kPa	**DP-111-E-P-J**	M5 female thread + G 1/8 male thread	PNP open-collector transistor
			For high pressure		–0.100 to +1.000 MPa	**DP-112-E-P-J**		
		Multi-function	For low pressure		–100.0 to +100.0 kPa	**DP-111A-E-P-J**		
			For high pressure		–0.100 to +1.000 MPa	**DP-112A-E-P-J**		
	North America	Standard	For low pressure		–100.0 to +100.0 kPa	**DP-101-N**	M5 female thread + NPT 1/8 male thread	NPN open-collector transistor
						DP-101-N-P		PNP open-collector transistor
			For high pressure		–0.100 to +1.000 MPa	**DP-102-N**		NPN open-collector transistor
						DP-102-N-P		PNP open-collector transistor
		Multi-function	For low pressure		–100.0 to +100.0 kPa	**DP-101A-N**		NPN open-collector transistor
						DP-101A-N-P		PNP open-collector transistor
			For high pressure		–0.100 to +1.000 MPa	**DP-102A-N**		NPN open-collector transistor
						DP-102A-N-P		PNP open-collector transistor
Short pressure port type	Asia	Standard	For low pressure		–100.0 to +100.0 kPa	**DP-101-M**	M5 female thread	NPN open-collector transistor
			For high pressure		–0.100 to +1.000 MPa	**DP-102-M**		
		Multi-function	For low pressure		–100.0 to +100.0 kPa	**DP-101A-M**		
			For high pressure		–0.100 to +1.000 MPa	**DP-102A-M**		

Type without connector attached cable

Type without connector attached cable **CN-14A-C2** is available.
When ordering this type, suffix "**-J**" to the Model No.
(e.g.) Type without connector atlached cable of **DP-101-N** is "**DP-101-N-J**"

Accessory

- **CN-14A-C2**
  (Connector attached cable 2 m 6.562 ft)

OPTIONS

Designation	Model No.	Description	
Connector attached cable	**CN-14A-C1**	Length: 1 m 3.281 ft	0.2 mm² 4-core cabtyre cable with connector on one end Cable outer diameter: ø3.7 mm ø0.146 in
	CN-14A-C2 (Note)	Length: 2 m 6.562 ft	
	CN-14A-C3	Length: 3 m 9.843 ft	
	CN-14A-C5	Length: 5 m 16.404 ft	
Connector attached cable (Flexible cable)	**CN-14A-R-C1**	Length: 1 m 3.281 ft	0.2 mm² 4-core flexible cabtyre cable with connector on one end Cable outer diameter: ø3.7 mm ø0.146 in
	CN-14A-R-C2	Length: 2 m 6.562 ft	
	CN-14A-R-C3	Length: 3 m 9.843 ft	
	CN-14A-R-C5	Length: 5 m 16.404 ft	
M8 connector attached cable	**CN-24A-C2**	Length: 2 m 6.562 ft	For M8 plug-in connector type The connector on one end Cable outer diameter: ø4 mm ø0.157 in
	CN-24A-C5	Length: 5 m 16.404 ft	
Connector	**CN-14A**	Set of 10 housings and 40 contacts	
Sensor mounting bracket	**MS-DP1-1**	Allows sensors to be installed on the flooring or ceiling. Multiple sensors can also be mounted closely.	
	MS-DP1-5	Allows sensors to be installed on the wall. Multiple sensors can also be mounted closely.	
Panel mounting bracket	**MS-DP1-2**	Allows installation to panels with thickness of 1 to 6 mm 0.039 to 0.236 in. Multiple sensors can also be mounted closely.	
	MS-DP1-4	Allows replacement from **DP2** / **DP3** series to **DP-100** series. For newly designed set-up, please use panel mounting bracket **MS-DP1-2** for panel mounting.	
Front protection cover	**MS-DP1-3**	Protects the adjustment surfaces of sensors. (Can be attached when using the panel mounting bracket)	
Conversion bushing	**MS-DP1-7**	By equipping with **DP-10□-M(-P)**, pressure port can be converted to Rc1/8 female thread. Replacement from **DP2** / **DP3** series is possible.	
Flat attachment	**MS-DP1-FM**	M5 female thread	Pressure port and cable can now be pulled out in downward, left or right directions. Flat mounting on surfaces such as the wall is made possible.
	MS-DP1-FR	Rc1/8 female thread	
	MS-DP1-FN	NPT1/8 female thread	
	MS-DP1-FE	G1/8 female thread	
Copy unit	**SC-SU1**	Copy the controller settings to other controllers.	

Note: The connector attached cable **CN-14A-C2** is supplied with the **DP-100** series.
(Excluding M8 plug-in connector type).

Panel mounting bracket, Front protection cover

- **MS-DP1-2**
- **MS-DP1-3**

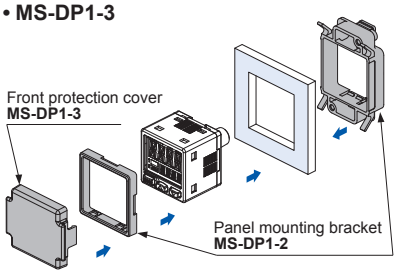

- **MS-DP1-4**

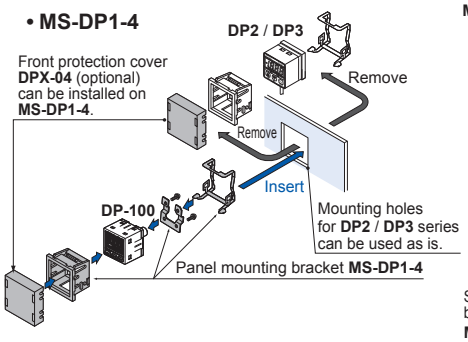

Flat attachment

- **MS-DP1-FM**
- **MS-DP1-FR**
- **MS-DP1-FN**
- **MS-DP1-FE**

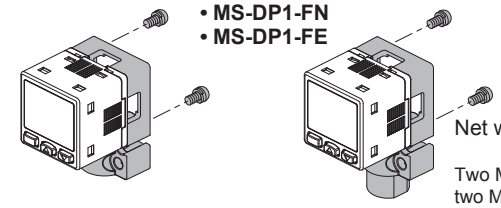

Net weight: **MS-DP1-FM** 15 g approx.
MS-DP1-FR/FN/FE 25 g approx.
Two M3 (length 8 mm 0.315 in) screws,
two M4 (length 20 mm 0.787 in) screws are attached.

Recommended connector

Contact: SPHD-001T-P0.5, Housing: PAP-04V-S
(Manufactured by J.S.T. Mfg.Co., Ltd.)
Note: Contact the manufacturer for details of the recommended products.

Recommended crimping tool

Model No.: YC-610R
(Manufactured by J.S.T. Mfg. Co., Ltd.)
Note: Contact the manufacturer for details of the recommended products.

Copy unit

- **SC-SU1**

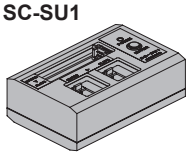

Connector attached cable

- **CN-14A-C□**
- **CN-14A-R-C□**

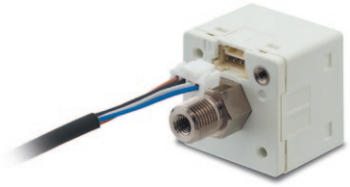

M8 connector attached cable

- **CN-24A-C□**

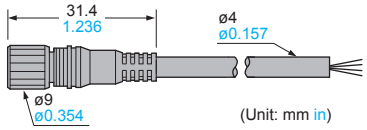

Sensor mounting bracket

- **MS-DP1-1**

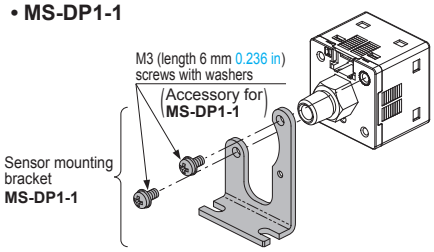

- **MS-DP1-5**

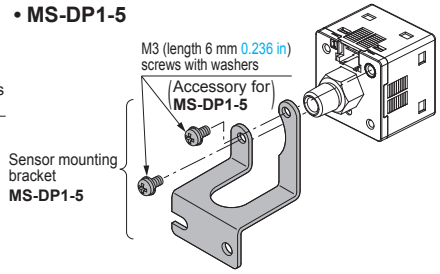

Conversion bushing

- **MS-DP1-7**

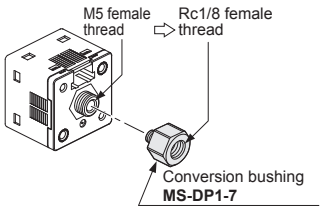

SPECIFICATIONS

Item \ Type	Standard		Multi-function	
	For low pressure	For high pressure	For low pressure	For high pressure
Model No. Asia (Note 2)	**DP-101(-M)(-P)**	**DP-102(-M)(-P)**	**DP-101A(-M)(-P)**	**DP-102A(-M)(-P)**
Model No. Europe	**DP-101-E-P**	**DP-102-E-P**	**DP-101A-E-P**	**DP-102A-E-P**
Model No. Europe, M8 plug-in connector type	**DP-111-E-P-J**	**DP-112-E-P-J**	**DP-111A-E-P-J**	**DP-112A-E-P-J**
Model No. North America (Note 2)	**DP-101-N(-P)**	**DP-102-N(-P)**	**DP-101A-N(-P)**	**DP-102A-N(-P)**
Type of pressure	Gauge pressure			
Rated pressure range	–100.0 to +100.0 kPa	–0.100 to +1.000 MPa	–100.0 to +100.0 kPa	–0.100 to +1.000 MPa
Set pressure range	–100.0 to +100.0 kPa –1.020 to +1.020 kgf/cm² –1.000 to +1.000 bar –14.50 to +14.50 psi –750 to +750 mmHg –29.5 to +29.5 inHg	–0.100 to +1.000 MPa –100 to +1,000 kPa –1.02 to +10.20 kgf/cm² –1.00 to +10.00 bar –14.6 to +145.0 psi	–100.0 to +100.0 kPa –1.020 to +1.020 kgf/cm² –1.000 to +1.000 bar –14.50 to +14.50 psi –750 to +750 mmHg –29.5 to +29.5 inHg	–0.100 to +1.000 MPa –100 to +1,000 kPa –1.02 to +10.20 kgf/cm² –1.00 to +10.00 bar –14.6 to +145.0 psi
Pressure withstandability	500 kPa	1.5 MPa	500 kPa	1.5 MPa
Applicable fluid	Non-corrosive gas			
Selectable unit	For low pressure: kPa, kgf/cm², bar, psi, mmHg, inHg, For high pressure: MPa, kPa, kgf/cm², bar, psi			
Supply voltage	12 to 24 V DC ±10 % Ripple P-P 10 % or less			
Power consumption	Normal operation: 840 mW or less (Current consumption 35 mA or less at 24 V supply voltage) ECO mode: 600 mW or less at STD (Current consumption 25 mA or less at 24 V supply voltage) 480 mW or less at FULL (Current consumption 20 mA or less at 24 V supply voltage)			
Comparative output	<Asia (NPN output) , North America (NPN output)> NPN open-collector transistor • Maximum sink current: 100 mA • Applied voltage: 30 V DC or less (between comparative output and 0 V) • Residual voltage: 2 V or less (at 100 mA sink current)		<Asia (PNP output) , Europe, North America (PNP output)> PNP open-collector transistor • Maximum source current: 100 mA • Applied voltage: 30 V DC or less (between comparative output and +V) • Residual voltage: 2 V or less (at 100 mA source current)	
Output operation / Output modes	NO / NC (selectable by key operation) / EASY mode / Hysteresis mode / Window comparator mode			
Hysteresis	Minimum 1 digit (variable) (however, 2 digits when using psi unit)			
Repeatability	±0.1 % F.S. (within ±2 digits)	±0.2 % F.S. (within ±2 digits)	±0.1 % F.S. (within ±2 digits)	±0.2 % F.S. (within ±2 digits)
Response time	2.5 ms, 5 ms, 10 ms, 25 ms, 50 ms, 100 ms, 250 ms, 500 ms, 1,000 ms, 5,000 ms, selectable by key operation			
Short-circuit protection	Incorporated			
External input (Note 3) Auto-reference function / Remote zero-adjustment function	—		<Asia (NPN output) , North America (NPN output)> ON voltage: 0.4 V DC or less OFF voltage: 5 to 30 V DC, or open Input impedance: 10 kΩ approx. Input time: 1 ms or more	<Asia (PNP output) , Europe, North America (PNP output)> ON voltage: 5 V to +V DC OFF voltage: 0.6 V DC or less, or open Input impedance: 10 kΩ approx. Input time: 1 ms or more
Analog voltage output (Note 3)	—		Output voltage: 1 to 5 V DC Zero point: within 3 V ± 5 % F.S. Span: within 4 V ± 5 % F.S. Linearity: within ±1 % F.S. Output impedance: 1 kΩ approx.	Output voltage: 0.6 to 5 V Zero point: within 1 V ± 5 % F.S. Span: within 4.4 V ± 5 % F.S. Linearity: within ±1 % F.S. Output impedance: 1 kΩ approx.
Display	4 digits + 4 digits 3-color LCD display (Display refresh rate: 250 ms, 500 ms, 1,000 ms, selectable by key operation)			
Displayable pressure range	–100.0 to +100.0 kPa –1.020 to +1.020 kgf/cm² –1.000 to +1.000 bar –14.50 to +14.50 psi –750 to +750 mmHg –29.5 to +29.5 inHg	–0.100 to +1.000 MPa –100 to +1,000 kPa –1.02 to +10.20 kgf/cm² –1.00 to +10.00 bar –14.6 to +145.0 psi	–100.0 to +100.0 kPa –1.020 to +1.020 kgf/cm² –1.000 to +1.000 bar –14.50 to +14.50 psi –750 to +750 mmHg –29.5 to +29.5 inHg	–0.100 to +1.000 MPa –100 to +1,000 kPa –1.02 to +10.20 kgf/cm² –1.00 to +10.00 bar –14.6 to +145.0 psi
Indicator	Orange LED (Comparative output 1 operation indicator, comparative output 2 operation indicator: Lights up when each comparative output is ON)		Orange LED (Comparative output 1 operation indicator: Lights up when comparative output is ON, Analog voltage output operation indicator: Lights up when setting)	
Environmental resistance: Protection	IP40 (IEC)			
Environmental resistance: Ambient temperature	–10 to +50 °C +14 to +122 °F, Storage: –10 to +60 °C +14 to +140 °F (No dew condensation or icing allowed)			
Environmental resistance: Ambient humidity	35 to 85 % RH, Storage: 35 to 85 % RH			
Environmental resistance: Voltage withstandability	1,000 V AC for one min. between all supply terminals connected together and enclosure			
Environmental resistance: Insulation resistance	50 MΩ, or more, with 500 V DC megger between all supply terminals connected together and enclosure			
Environmental resistance: Vibration resistance	10 to 500 Hz frequency, 3 mm 0.118 in amplitude or maximum acceleration 196 m/s², in X, Y and Z directions for two hours each (when panel is mounted: 10 to 150 Hz frequency, 0.75 mm 0.030 in amplitude or maximum acceleration 49 m/s², in X, Y and Z directions for two hours each)			
Environmental resistance: Shock resistance	100 m/s² acceleration (10 G approx.) in X, Y and Z directions for three times each			
Temperature characteristics	Within ±0.5 % F.S. (at +20 °C +68 °F)	Within ±1 % F.S. (at +20 °C +68 °F)	Within ±0.5 % F.S. (at +20 °C +68 °F)	Within ±1 % F.S. (at +20 °C +68 °F)
Pressure port	Asia: M5 female thread + R (PT) 1/8 male thread (excluding **DP-□-M(-P)**), Europe: M5 female thread + G 1/8 male thread, North America: M5 female thread + NPT 1/8 male thread			
Material	Enclosure: PBT (glass fiber reinforced), LCD display: Acrylic, Pressure port: Stainless steel (SUS303)] , Mounting threaded part: Brass (nickel plated), Switch part: Silicone rubber			
Connecting method / Cable length	Connector / Total length up to 100 m 328.084 ft (less than 30 m 98.425 ft when conforming to CE marking) is possible with 0.3 mm², or more, cable.			
Weight	Net weight: 40 g approx. [**DP-10□-M(-P)**: 30 g approx.], Gross weight: 135 g approx. [**DP-10□-M(-P)**: 125 g approx.]			
Accessories	**CN-14A-C2** (Connector attached cable 2 m 6.562 ft): 1pc. (excluding M8 plug-in connector type)			

Notes: 1) Where measurement conditions have not been specified precisely, the conditions used were an ambient temperature of +20 °C +68 °F.
2) Model Nos. of Asia type having "**-M**" are short pressure port type. Model Nos. of North America type having the suffix "**-P**" are PNP output type.
3) Cannot be used at the same time.

I/O CIRCUIT AND WIRING DIAGRAMS

DP-10□ — NPN output type

I/O circuit diagram

Standard type

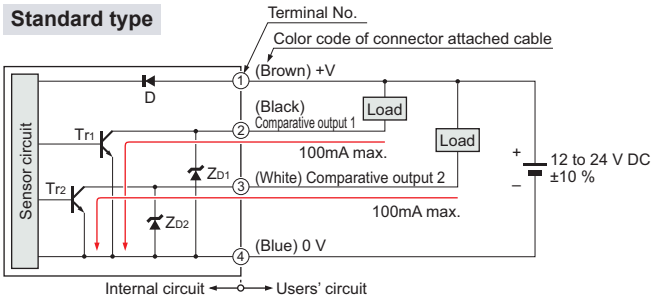

Symbols … D: Reverse supply polarity protection diode
ZD1, ZD1: Surge absorption zener diode
Tr1, Tr2: NPN output transistor

Multi-function type

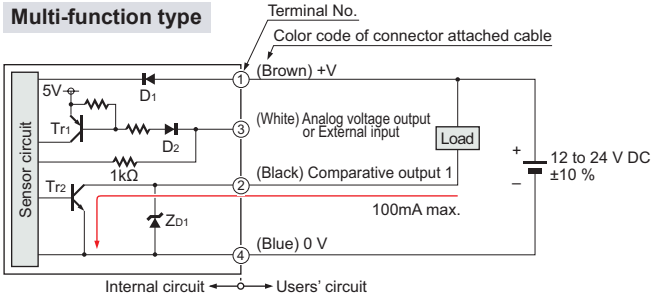

Symbols … D1, D2: Reverse supply polarity protection diode
ZD1: Surge absorption zener diode
Tr1 : PNP input transistor
Tr2 : NPN output transistor

Terminal arrangement diagram

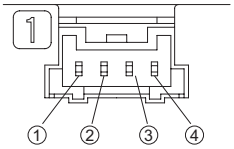

Terminal No.	Designation
①	+V
②	Comparative output 1
③	Standard type: Comparative output 2 Multi-function type: Analog voltage output or External input
④	0 V

DP-10□-P — PNP output type

I/O circuit diagram

Standard type

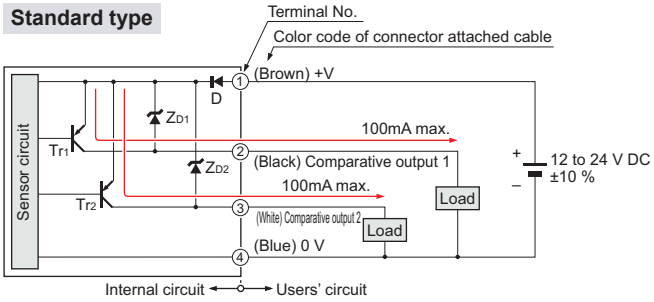

Symbols … D: Reverse supply polarity protection diode
ZD1, ZD1: Surge absorption zener diode
Tr1, Tr2: PNP output transistor

Multi-function type

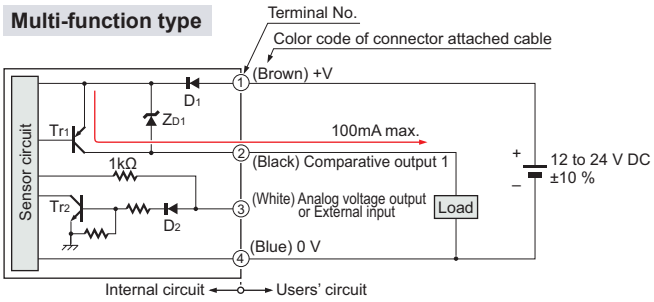

Symbols … D1, D2: Reverse supply polarity protection diode
ZD1: Surge absorption zener diode
Tr1 : PNP output transistor
Tr2 : NPN input transistor

Terminal arrangement diagram

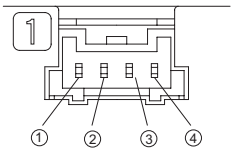

Terminal No.	Designation
①	+V
②	Comparative output 1
③	Standard type: Comparative output 2 Multi-function type: Analog voltage output or External input
④	0 V

I/O CIRCUIT AND WIRING DIAGRAMS

DP-11□-E-P-J PNP output type

I/O circuit diagram

Standard type

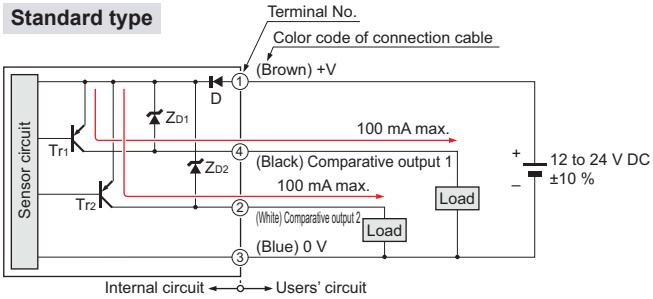

Symbols … D: Reverse supply polarity protection diode
ZD1, ZD1: Surge absorption zener diode
Tr1, Tr2: PNP output transistor

Multi-function type

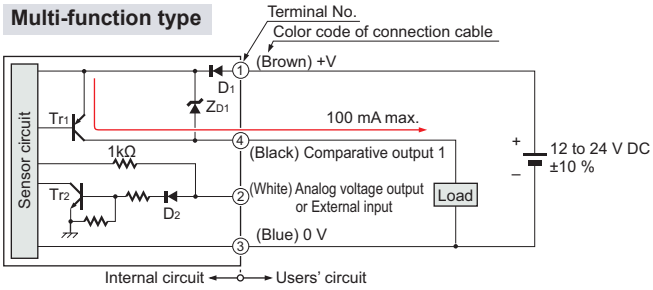

Symbols … D1, D2: Reverse supply polarity protection diode
ZD1: Surge absorption zener diode
Tr1: PNP output transistor
Tr2: NPN input transistor

Terminal arrangement diagram

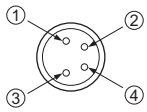

Terminal No.	Designation
①	+V
②	Standard type: Comparative output 2 Multi-function type: Analog voltage output or External input
③	0 V
④	Comparative output 1

PRECAUTIONS FOR PROPER USE

Refer to General precautions.

- Never use this product as a sensing device for personnel protection.
- In case of using sensing devices for personnel protection, use products which meet laws and standards, such as OSHA, ANSI or IEC etc., for personnel protection applicable in each region or country.
- The **DP-100** series is designed for use with non-corrosive gas. It cannot be used with liquid or corrosive gas.

Connection

- Do not apply stress directly to the connection cable leader or to the connector.

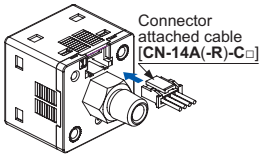

Conditions in use for CE conformity

- The **DP-100** series is a CE conformity product complying with EMC Directive. The harmonized standard with regard to immunity that applies to this product is EN 61000-6-2 and the following condition must be met to conform to that standard.

Conditions

- The line to connect with this sensor should be less than 30 m 98.425 ft.

Mounting

- The **MS-DP1-1** sensor mounting bracket is available separately, and it should be used for mounting. When tightening the sensor to the sensor mounting bracket, use a tightening torque of 0.5 N·m or less.

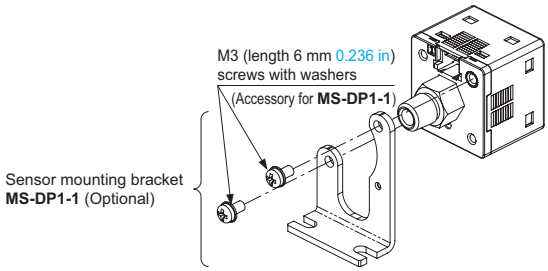

- The **MS-DP1-2** panel mounting bracket (optional) and the **MS-DP1-3** front protection cover (optional) are also available.

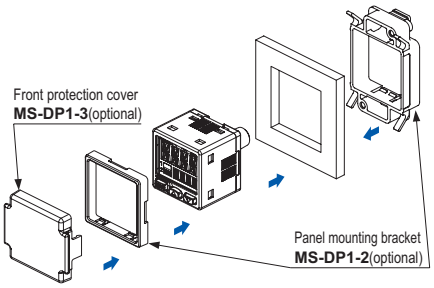

PRECAUTIONS FOR PROPER USE

Refer to General precautions.

Mounting

- The **MS-DP1-4** panel mounting bracket is available when switching from the **DP2** / **DP3** series.

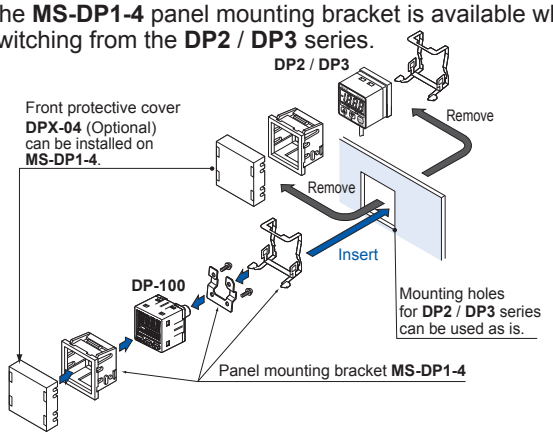

- An conversion bushing is available for when using the **DP-10□-M** short pressure port type. It can be used to switch between this model and the **DP2** / **DP3** series. When connecting to the pressure port, use a tightening torque of 1.0 N·m or less.

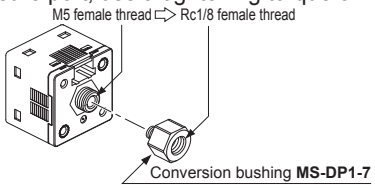

- The **MS-DP1-F□** flat attachment is available.
  If using the **MS-DP1-F□** flat attachment (optional), install by following the procedures given below.

①Decide the direction of this product to mount with the sensor.

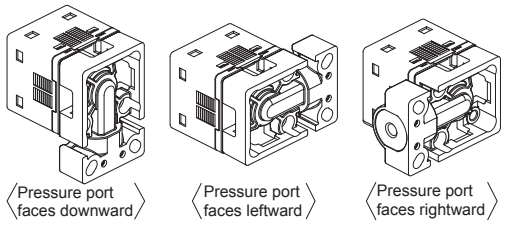

Note: It is not possible to mount this product such that the pressure port faces upward.

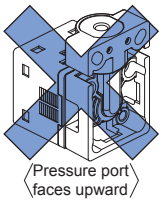

②Mount this product with the M3 female threads of the sensor by using the attached M3 (length 8 mm 0.315 in) screws. The tightening torque should be 0.5 N·m or less.

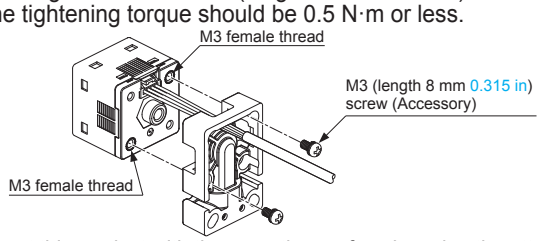

③Mount this product with the mounting surface by using the attached M4 (length 20 mm 0.787 in) screws. The tightening torque should be 1.2 N·m or less.

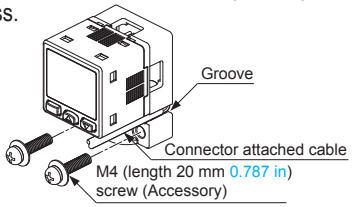

Note: Take care that if the cable with connector is sticking out of the side groove of this product when mounting, the cable may disconnected.

Piping

- If connecting a commercially-available coupling to the pressure port, attach a 12 mm 0.472 in spanner (14 mm 0.551 in spanner for **DP-100-E** type) to the hexagonal section of the pressure port to secure it, and tighten at a torque of 9.8 N·m or less. If it is tightened using excessive torque, it may damage the coupling or the pressure port.
  In addition, wrap sealing tape around the coupling when connecting it to prevent leaks.

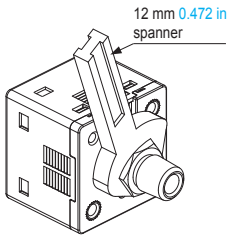

- If connecting a commercially-available joint to the pressure port of the **DP-10□-M**, hold the main unit in your hand to steady it, and tighten to a torque of 1.0 N·m or less. If it is tightened to an excessive torque, the joint or the main unit may become damaged.
- If connecting a commercially-available joint to the pressure port of the **MS-DP1-7**, tighten to a torque of 9.8 N·m or less.

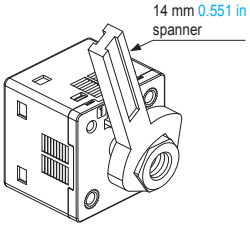

- The tightening torque should be 1 N·m or less when connecting a coupling to the pressure port of **MS-DP1-FM.**

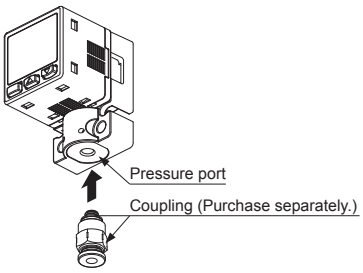

- When connecting the coupling to the pressure port of **MS-DP1-FR/FE/FN**, hold the pressure port with a 14 mm 0.551 in spanner and make sure that the tightening torque is 9.8 N·m or less.
  In addition, in order to prevent any leakage, wind a sealing tape on the coupling when connecting.

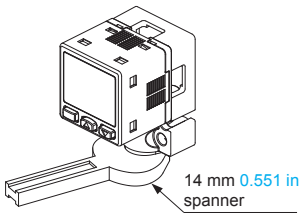

Note: Do not tighten the pressure port by holding the product with the spanner. It may cause the product breakage.

Flat attachment

- Make sure to mount **MS-DP1-F□** with the sensor properly. If it is not mounted properly, air leakage may occur.
- Take care that the excessive mounting and dismounting of this product may cause deterioration of the O-ring.
- If you touch the O-ring of **MS-DP1-F□**, or any scratch or dust, etc. is attached to it, air leakage may occur and the sensing performance may deteriorate.
  Take sufficient care when using and storing **MS-DP1-F□**.

PRECAUTIONS FOR PROPER USE

Refer to General precautions.

Others

- Use within the rated pressure range.
- Do not apply pressure exceeding the pressure withstandability value. The diaphragm will get damaged and correct operation shall not be maintained.
- Do not use during the initial transient time (0.5 sec. approx.) after the power supply is switched on.
- Avoid dust, dirt, and steam.
- Take care that the sensor does not come in direct contact with water, oil, grease, or organic solvents, such as, thinner, etc.
- Do not insert wires, etc., into the pressure port. The diaphragm will get damaged and correct operation shall not be maintained.
- Do not operate the keys with pointed or sharp objects.

RUN mode

- This is the normal operating mode.

Setting item	Description
Threshold value setting	The threshold values for ON / OFF operation can be changed directly by pressing the increment key (UP) and the decrement key (DOWN).
Zero-adjustment function	This forces the pressure value display to be reset to zero when the pressure port is open on the atmospheric pressure side.
Key lock function	Stops key operations from being accepted.
Peak hold / bottom hold function	Displays the peak value and bottom value for fluctuating pressure. The peak value appears in the main display, and the bottom value appears in the sub display.

MENU SETTING mode

- If the mode selection key is pressed and held for 2 sec. in RUN mode, the mode will switch to MENU SETTING mode.
- If the mode selection key is pressed while a setting is being made, the mode will switch to RUN mode. In this case, the settings that have been changed will be entered.

Setting item	Description
Comparative output 1 output mode setting	Sets the output mode for comparative output 1.
Comparative output 2 output mode setting (standard type only)	Sets the output mode for comparative output 2.
Analog voltage output / external input switching (multi-function type only)	Allows switching between analog voltage output and auto-reference input / remote zero-adjustment input.
NO / NC switching	Sets normally open (NO) or normally closed (NC).
Response time setting	Sets the response time. The response time can be selected from 2.5 ms, 5 ms, 10 ms, 25 ms, 50 ms, 100 ms, 250 ms, 500 ms, 1,000 ms and 5,000 ms.
Display color switching for main display	Allows the color for the main display to be changed. The colors can be set to “red / green” or “green / red” to correspond to ON / OFF output, or it can be fixed at “red” or “green” all the time.
Unit switching	Pressure unit can be changed.

PRO mode

- If the mode selection key is pressed and held for 5 sec. in RUN mode, the mode will switch to PRO mode.
- If the mode selection key is pressed while a setting is being made, the mode will switch to RUN mode. In this case, the settings that have been changed will be entered.

Setting item	Description
Sub display switching	Changes the information in the sub display during RUN mode operation to the desired alphanumeric display.
Display refresh rate switching	Changes the display refresh rate for the pressure value displayed in the main display.
Hysteresis fix value switching	Sets the response time for EASY mode and window comparator mode. (8 steps)
Linked display color switching (standard type only)	Allows the display color for the main display to be switched in line with the output operation for comparative output 1 or comparative output 2.
ECO mode setting	Allows power consumption to be reduced by dimming the display or turning it off.
Setting check code	Allows the setting details to be checked via codes.
Setting copy mode	Allows the setting details for the master sensor to be copied to slave sensors.
Reset setting	Resets the settings to the factory settings.

Table of codes

Code	1st digit		2nd digit			3rd digit	4th digit	
			Standard type		Multi-function type			Standard type only
	Comparative output 1 output mode	NO / NC switching	Comparative output 2 output mode	NO / NC switching	Analog voltage output / External input	Threshold value display	Display color for main display	Display color linking
0	EASY	NO	OFF	OFF	Analog voltage output	P-1, Lo-1	Red when ON	Comparative output 1
1		NC	EASY	NO	Auto-reference	Hi-1		Comparative output 2
2	Hysteresis	NO		NC	Remote zero-adjustment	P-2, Lo-2	Green when ON	Comparative output 1
3		NC	Hysteresis	NO	—	Hi-2		Comparative output 2
4	Window comparator	NO		NC	—	ADJ.	Always red	Comparative output 1
5		NC	Window comparator	NO	—	—		Comparative output 2
6	—	—		NC	—	—	Always green	Comparative output 1
7	—	—	—	—	—	—		Comparative output 2

Code	5th digit	6th digit	7th digit	8th digit
	Response time	Unit switching	Display refresh rate	ECO mode
0	2.5 ms	MPa	250 ms	OFF
1	5 ms	kPa	500 ms	STD
2	10 ms	kgf/cm²	1,000 ms	FULL
3	25 ms	bar	—	—
4	50 ms	psi	—	—
5	100 ms	mmHg	—	—
6	250 ms	inchHg	—	—
7	500 ms	—	—	—
8	1,000 ms	—	—	—
9	5,000 ms	—	—	—

DIMENSIONS (Unit: mm in)

The CAD data in the dimensions can be downloaded from our website.

DP-10□ — Sensor

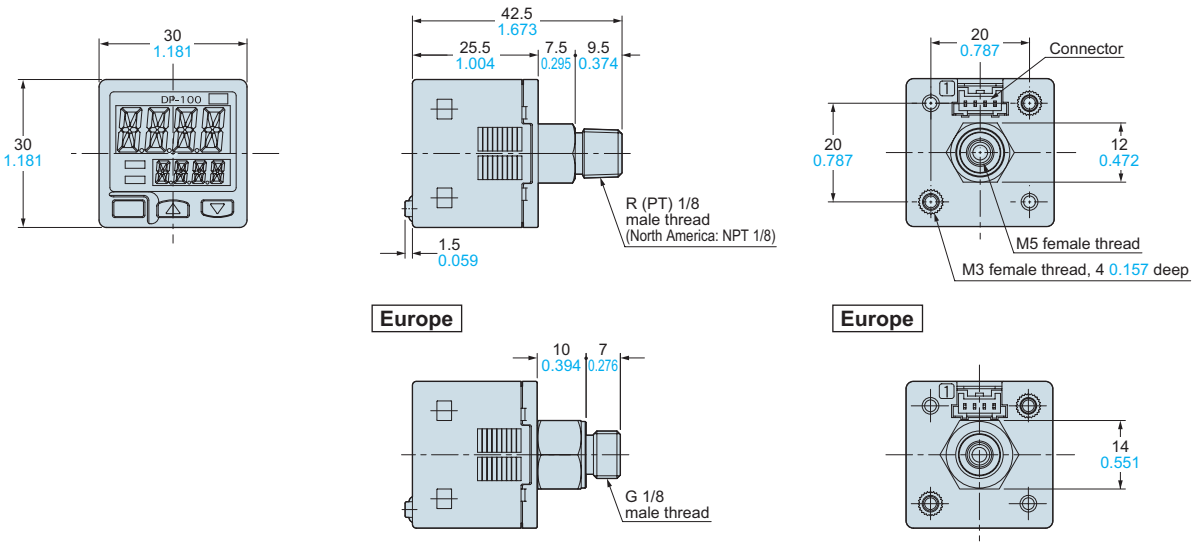

DP-10□-M(-P) — Sensor

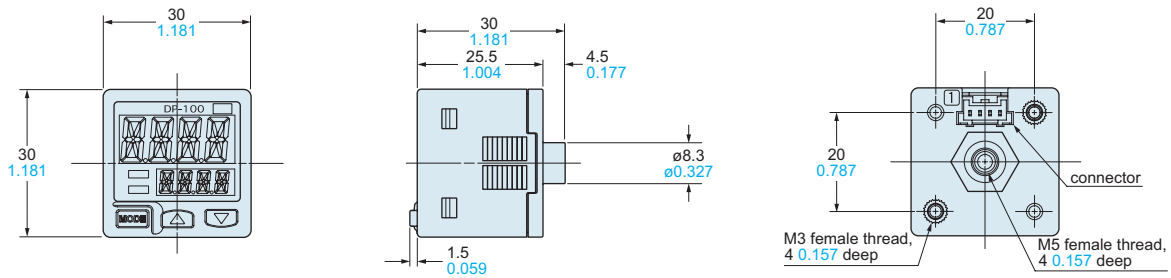

DP-11□-E-P-J — Sensor

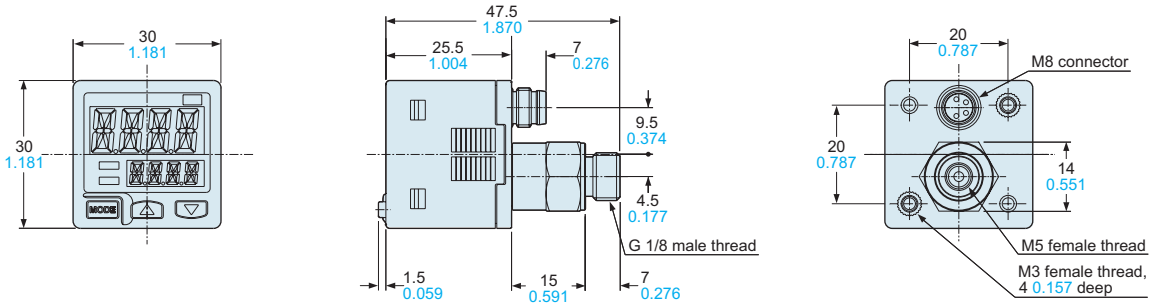

CN-14A-C□ CN-14A-R-C□ — Connector attached cable (Optional, **CN-14A-C2** is attached to the sensor)

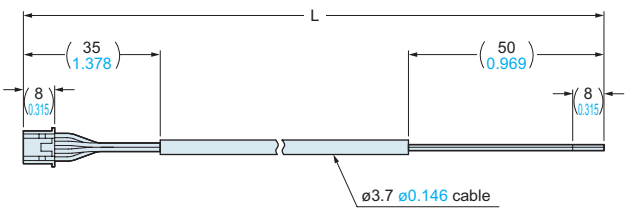

• Length L

Model No.	Length L
CN-14A(-R)-C1	1,000 39.370
CN-14A(-R)-C2	2,000 78.740
CN-14A(-R)-C3	3,000 118.110
CN-14A(-R)-C5	5,000 196.850

DIMENSIONS (Unit: mm in)

The CAD data in the dimensions can be downloaded from our website.

MS-DP1-1

Sensor mounting bracket (Optional)

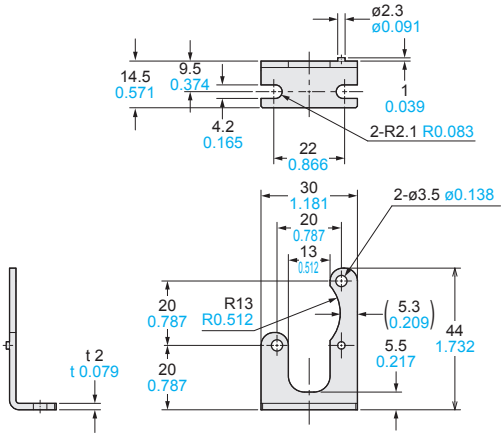

Material: Cold rolled carbon steel (SPCC)
(Uni-chrome plated)
Two M3 (length 6 mm 0.236 in) screws with washers are attached.

Assembly dimensions

Mounting drawing with **DP-10□**

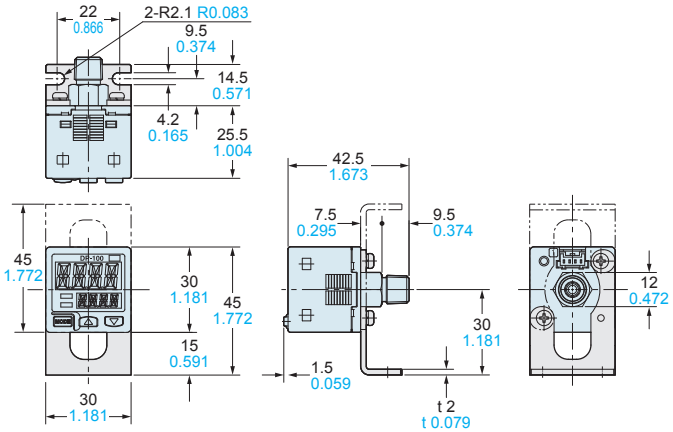

MS-DP1-5

Sensor mounting bracket (Optional)

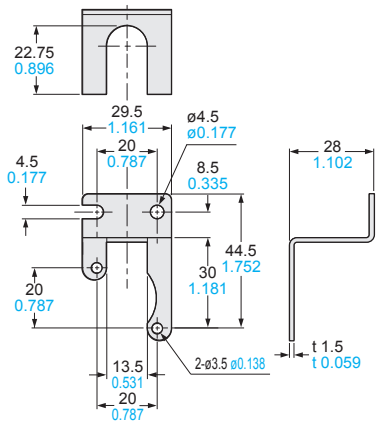

Material: Cold rolled carbon steel (SPCC)
(Uni-chrome plated)
Two M3 (length 6 mm 0.236 in) screws with washers are attached.

Assembly dimensions

Mounting drawing with **DP-10□-M**

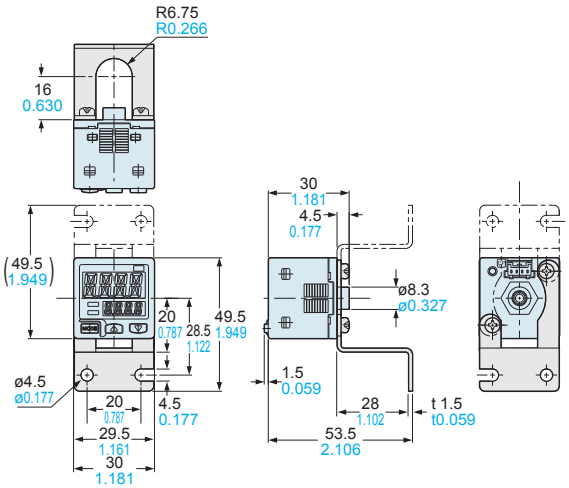

MS-DP1-2 MS-DP1-3

Panel mounting bracket (Optional), Front protection cover (Optional)

Assembly dimensions

Mounting drawing with **DP-10□**

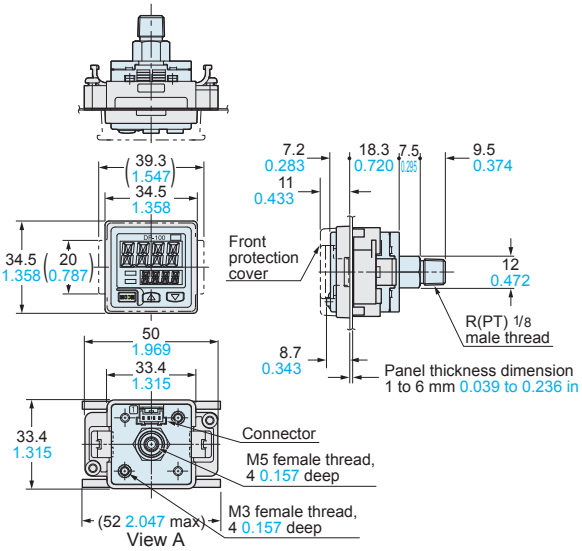

Material: POM (Panel mounting bracket)
Polycarbonate (Front protection cover)

Panel cut-out dimensions

When 1 unit is installed

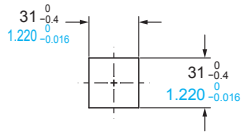

When "n" units are installed horizontally in series

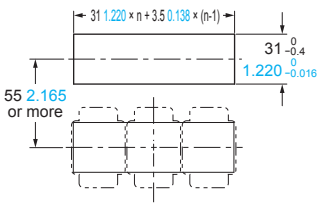

Note: The panel thickness should be 1 to 6 mm 0.039 to 0.236 in.

When "n" units are installed vertically in series

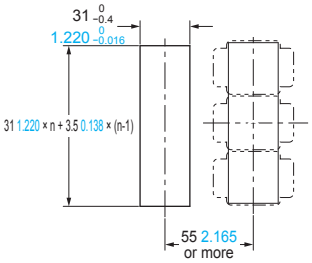

Note: The panel thickness should be 1 to 6 mm 0.039 to 0.236 in.

DIMENSIONS (Unit: mm in)

The CAD data in the dimensions can be downloaded from our website.

MS-DP1-4

Panel mounting bracket (Optional)

Assembly dimensions

Mounting drawing with **DP-10□**

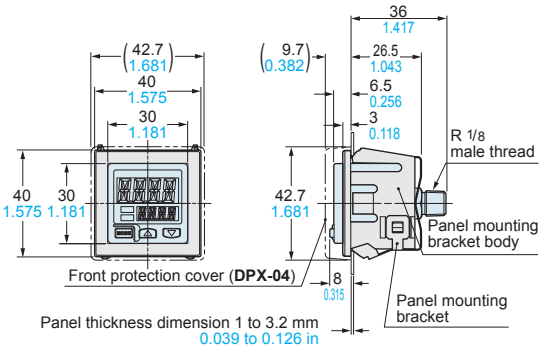

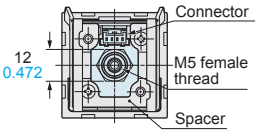

Panel cut-out dimensions

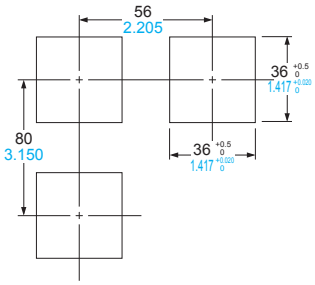

Note: The panel tickness should be 1 to 32 mm 0.039 to 1.260 in.

Material: Panel mounting bracket body ··· Nylon 6
Panel mounting bracket ··· Stainless steel (SUS304)
Spacer ··· Cold rolled carbon steel (SPCC)(Uni-chrome plated)

MS-DP1-7

Conversion bushing (Optional)

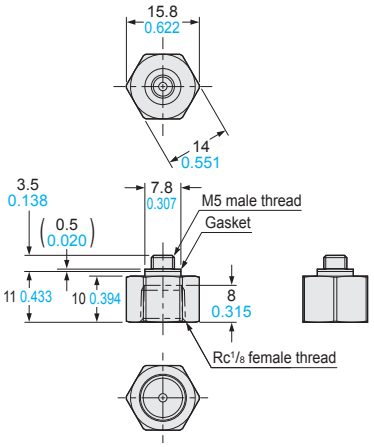

Material: Brass (Nickel plated)
Weight: 10 g approx.

MS-DP1-FM

Flat attachment (Optional)

Assembly dimensions

Mounting drawing with **DP-10□-M**

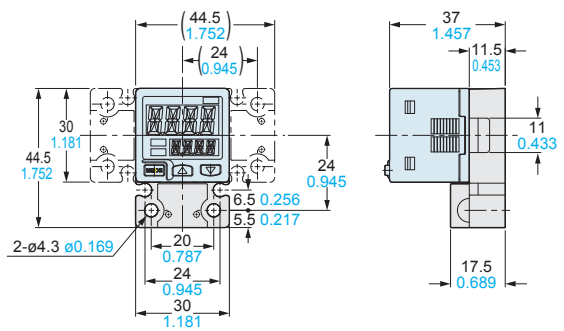

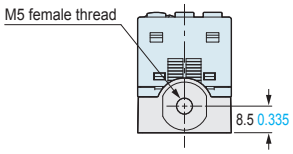

Material: Enclosure···Polybutylene terephthalate (PBT) (Glass fiber reinforced)
Pressure port···Stainless steel (SUS303)
O-ring···Hydrogenated Nitrile Butadiene Rubber (H-NBR)
Weight: 15 g approx. (flat attachment only)

Two M3 (length 8 mm 0.315 in) screws, two M4 (length 20 mm 0.787 in) screws are attached.

MS-DP1-FR/FN/FE

Flat attachment (Optional)

Assembly dimensions

Mounting drawing with **DP-10□-M**

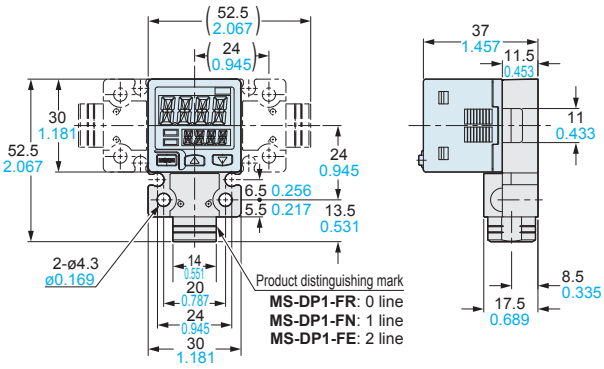

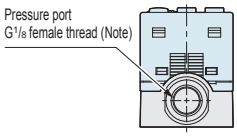

Note: **MS-DP1-FR** has a Rc1/8 female thread.
MS-DP1-FN has a NPT1/8 female thread.

Material: Enclosure···Polybutylene terephthalate (PBT) (Glass fiber reinforced)
Pressure port···Stainless steel (SUS303)
O-ring···Hydrogenated Nitrile Butadiene Rubber (H-NBR)
Weight: 25 g approx. (flat attachment only)

Two M3 (length 8 mm 0.315 in) screws, two M4 (length 20 mm 0.787 in) screws are attached.

MEMO